BRAKES, CALIPER, FRONT - Z26S4D92AN/AH/BN/BH (C750608)

2026 RZR - RZR PRO S4 ULTIMATE (R01) - Z26S4D92AN/AH/BN/BH

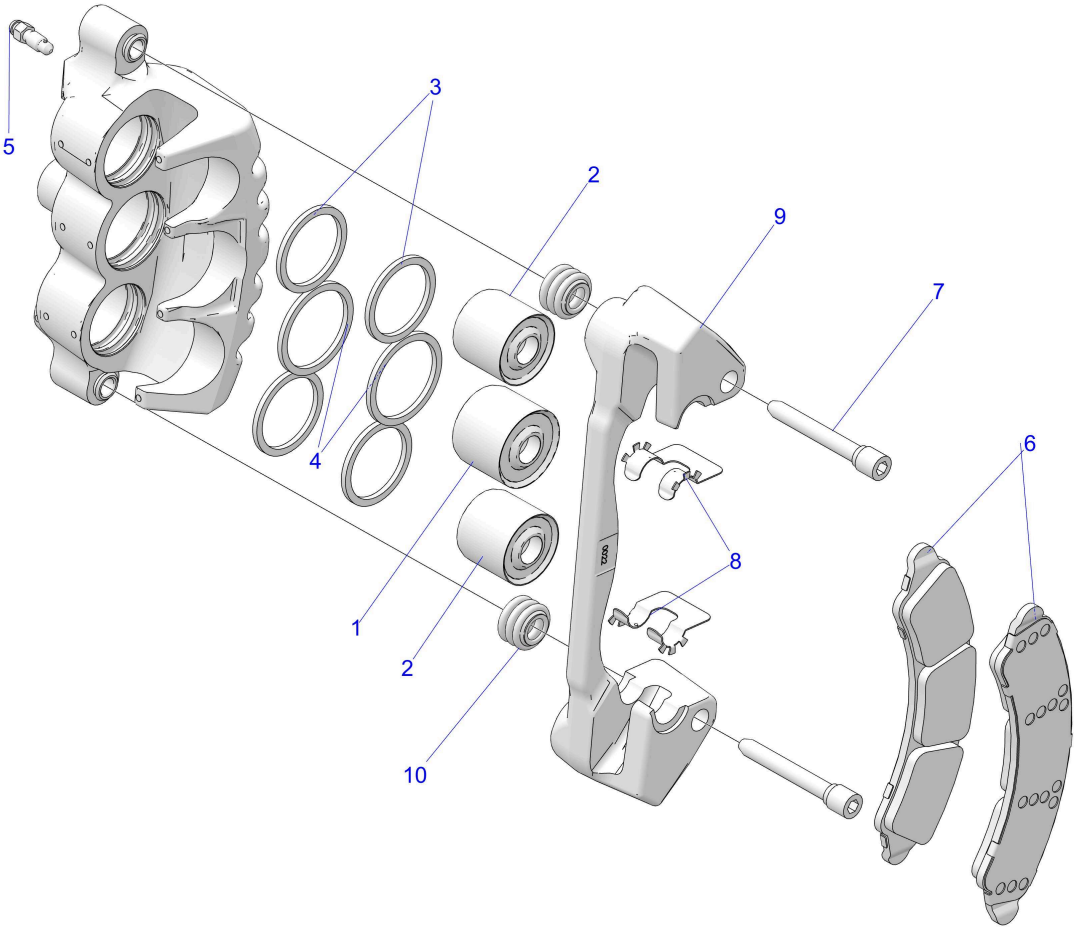

© 2024 Polaris Industries Inc.

C750608

Reference #	Part#	Description	Quantity
	1914296	ASM-BRK-CAL-FL-3-PISTON [INCL. ALL]	1
	1914297	ASM-BRK-CAL-FR-3-PISTON [INCL. ALL]	1
1	5144812	PISTON-1-3/8SS	1
2	5144813	PISTON-1-1/2 SS	2
3	5412010	SEAL-CALIPER INNER,1.50"	2
4	5412907	SEAL-CALIPER,INNER,1.375"	4
5	7081343	SCR-M7X1.0,BLEEDER,OLIVE D	1
6	2211640	K-PRO-R/TURBO-R FR-PADS [INCL. 2 PADS & WEAR CLIPS]	1
7	1913339	THREADED BRACKET PIN	2
8	5266374	BRAKE PAD WEAR CLIP	2
9	5143246	MACHINED BRACKET	1
10	5412506	BOOT-PIN SEAL	2

Copyright 1996-2026 Polaris Industries U.S.A All rights reserved.